Heat and Temperature – Cut from Jan 2007 – Jan 2008 Exams

1. Given the balanced equation:

$$I + I \rightarrow I_2$$

Which statement describes the process represented by this equation?

(1) A bond is formed as energy is absorbed.
(2) A bond is formed and energy is released.
(3) A bond is broken as energy is absorbed.
(4) A bond is broken and energy is released.

2. Which term is defined as a measure of the average kinetic energy of the particles in a sample?

(1) temperature (3) thermal energy
(2) pressure (4) chemical energy

3. Which term refers to the difference between the potential energy of the products and the potential energy of the reactants for any chemical change?

(1) heat of deposition
(2) heat of fusion
(3) heat of reaction
(4) heat of vaporization

4. Which kelvin temperature is equal to 56°C?

(1) –329 K (3) 217 K
(2) –217 K (4) 329 K

5. Which reaction releases the greatest amount of energy per 2 moles of product?

(1) $2CO(g) + O_2(g) \rightarrow 2CO_2(g)$
(2) $4Al(s) + 3O_2(g) \rightarrow 2Al_2O_3(s)$
(3) $2H_2(g) + O_2(g) \rightarrow 2H_2O(g)$
(4) $N_2(g) + 3H_2(g) \rightarrow 2NH_3(g)$

Use the reaction shown below to answer questions 6 and 7.

$$C_3H_8(g) + 5O_2(g) \rightarrow 3CO_2(g) + 4H_2O(\ell) + 2219.2\ kJ$$

6. Draw a potential energy diagram for this reaction. [1]

7. Determine the total amount of energy released when 2.50 moles of propane is completely reacted with oxygen. [1]

8. Given the balanced equation representing a reaction: $N_2(g) + O_2(g) + 182.6\ kJ \rightarrow 2NO(g)$ Draw a potential energy diagram for this reaction. [1]

Base your answers to questions 9 through 11 on the information below.

A 5.00-gram sample of liquid ammonia is originally at 210. K. The diagram of the partial heating curve below represents the vaporization of the sample of ammonia at standard pressure due to the addition of heat. The heat is *not* added at a constant rate.

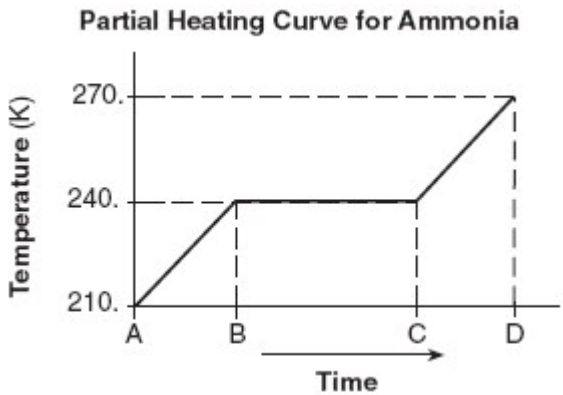

Some physical constants for ammonia are shown in the data table below.

Some Physical Constants for Ammonia

specific heat capacity of $NH_3(\ell)$	4.71 J/g•K
heat of fusion	332 J/g
heat of vaporization	1370 J/g

9. Calculate the total heat absorbed by the 5.00-gram sample of ammonia during time interval *AB*. Your response must include *both* a correct numerical setup and the calculated result. [2]

10. Describe what is happening to *both* the potential energy and the average kinetic energy of the molecules in the ammonia sample during time interval *BC*. Your response must include *both* potential energy and average kinetic energy. [1]

11. Determine the total amount of heat required to vaporize this 5.00-gram sample of ammonia at its boiling point. [1]

Base your answers to questions 12 through 14 on the information below.

A 100.0-gram sample of NaCl(s) has an initial temperature of 0°C. A chemist measures the temperature of the sample as it is heated. Heat is *not* added at a constant rate. The heating curve for the sample is shown below.

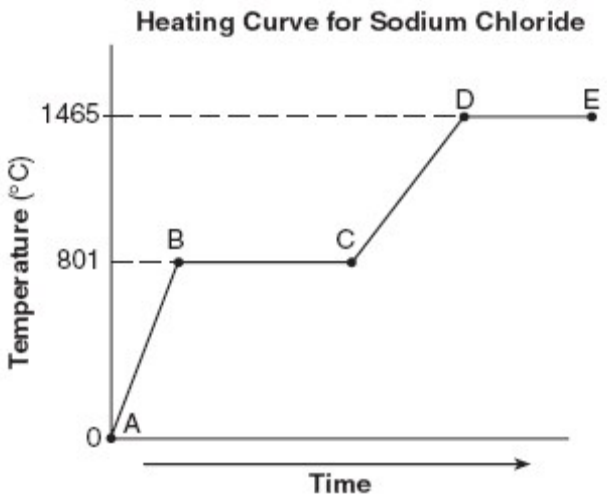

12. Determine the temperature range over which the entire NaCl sample is a liquid. [1]

13. Identify *one* line segment on the curve where the average kinetic energy of the particles of the NaCl sample is changing. [1]

14. Identify *one* line segment on the curve where the NaCl sample is in a single phase and capable of conducting electricity. [1]

Base your answers to questions 15 and 16 on the information below.

A student performed an experiment to determine the total amount of energy stored in a peanut. The accepted value for the energy content of a peanut is 30.2 kilojoules per gram. The student measured 100.0 grams of water into a metal can and placed the can on a ring stand, as shown in the diagram below. The peanut was attached to a wire suspended under the can. The initial temperature of the water was recorded as 22.0°C. The peanut was ignited and allowed to burn. When the peanut finished burning, the final water temperature was recorded as 57.0°C. The student's experimental value for the energy content of this peanut was 25.9 kilojoules per gram.

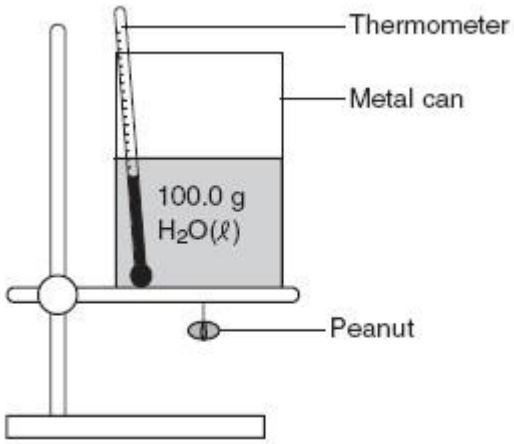

15. Calculate the total amount of heat absorbed by the water. Your response must include *both* a correct numerical setup and the calculated result. [2]

16. Determine the student's percent error for the energy content of this peanut. [1]

Base your answers to questions 17 through 20 on the information below.

The temperature of a sample of a substance is increased from 20.°C to 160.°C as the sample absorbs heat at a constant rate of 15 kilojoules per minute at standard pressure. The graph below represents the relationship between temperature and time as the sample is heated.

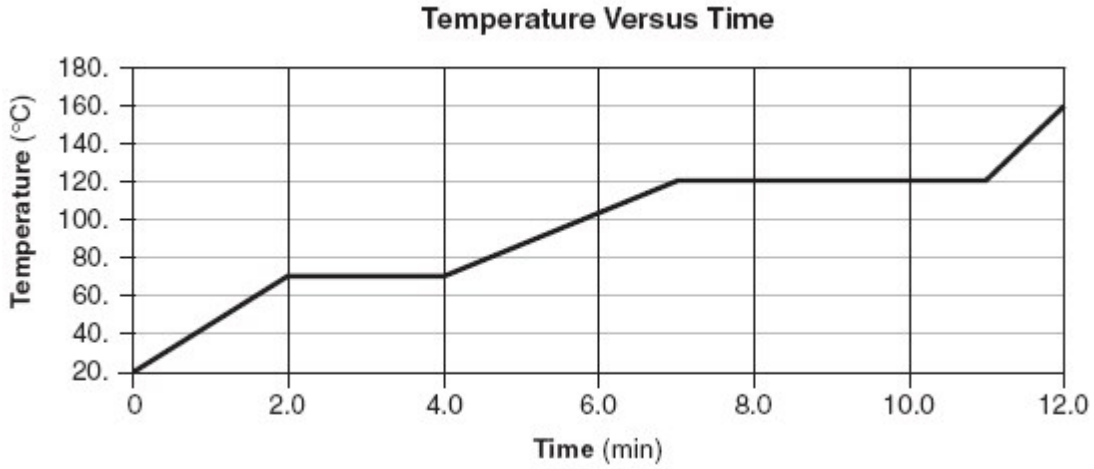

17. What is the boiling point of this sample? [1]

18. Draw *at least nine* particles in the box, showing the correct particle arrangement of this sample during the first minute of heating. [1]

19. What is the total time this sample is in the liquid phase, only? [1]

20. Determine the total amount of heat required to completely melt this sample at its melting point. [1]